Unical® 9000

The electro-pneumatic controller for fully automated pH measurement, cleaning and calibration

Polished stainless steel for food and pharmaceutical applications

Powder-coated steel for corrosive environments

In combination with the Protos® process analysis system and the SensoGate® or Ceramat® sensor lock-gates, Uniclean® offers the ideal functionality of a complete system for automatic process control of a pH measurment. It allows highly accurate measurements to be taken, even with difficult process conditions such as high pressure, high temperatures, and high levels of impurities. The system can be installed next to the process, within the hazardous area.

Maximum availability of the point of measurement: Cleaning without interrupting the process, even when measuring directly in the pressure tank
Since the sensor is not removed for cleaning, the process can continue uninterrupted. This allows problem-free measurements in a pressure tank or in the main pipe. Elaborate and lockable bypasses are eliminated and accuracy increases.

Low maintenance
Fully automatic sensor calibration in user-defined intervals without interrupting the process. Two buffer solutions are automatically pumped into the calibration chamber. Only the buffer bottles need to be refilled.

Cost-efficient
Low-wear and low-maintenance pump with extremely low consumption of buffer.

Long sensor life – also in critical processes
When measuring in aggressive media or at high process temperatures, the sensor rests in the calibration chamber and is only briefly moved into the process for measurement. This method decisively increases the sensor life.

Safe and easy measurement, even in strongly polluted media
Sensor cleaning and rinsing are performed at user-defined intervals. Cleaning solution and water are automatically pumped into the calibration chamber. Dismounting and manual cleaning of the sensor are not required.

Distinction between calibration and adjustment
This allows you to check the sensor data in the running process. An adjustment is only carried out when preset deviations of the calibration values are exceeded. Constant displacement of the measured values due to small calibration scatters is omitted.

Modern fieldbus integration
The interfaces to PROFIBUS PA or FOUNDATION Fieldbus allow the Unical® system to be integrated directly in a field-bus network. Naturally also in hazardous locations.

Universal adaptation to retractable fittings
The modular structure of the Unical® allows any retractable fittings to be used. Optimum functionality is achieved with the Ceramat® and Sensogate® sensor lock-gates.

Clean and safe construction
All features for smooth, safe, and low-maintenance operation are provided as standard: water pressure gauge and service switch with alert message and check-back signal of the actual probe position, air filter and water trap integrated, flooding sensor with alert message.

Facts

- consistent enclosure concept for all devices
- modular design, adaptable to virtually every measuring task
- easy assembly and retrofitting
- tidy hose guiding
- hygienic version (polished stainless steel) or corrosion-proof (powder-coated steel)
- no entrainment and backmixing due to separate routing of the media
- low maintenance effort due to innovative pump technology and extremely low consumption of media
- automatic 2-point calibration
- time-controlled cleaning and checking
- cleaning with water and additional cleaning solution
- reduced maintenance effort due to automatic calibration
- no interruptions in production for calibration
- operation in hazardous locations Zone 1 (all system components)
- longer sensor life due to short-time measurement and regular cleaning
- immediate readiness for measurement after production interruption since sensor is safely stored in liquid
- safety ensured by monitoring of the compressed air and water supply, the probe position and the buffer and cleaning solution level

Inside View

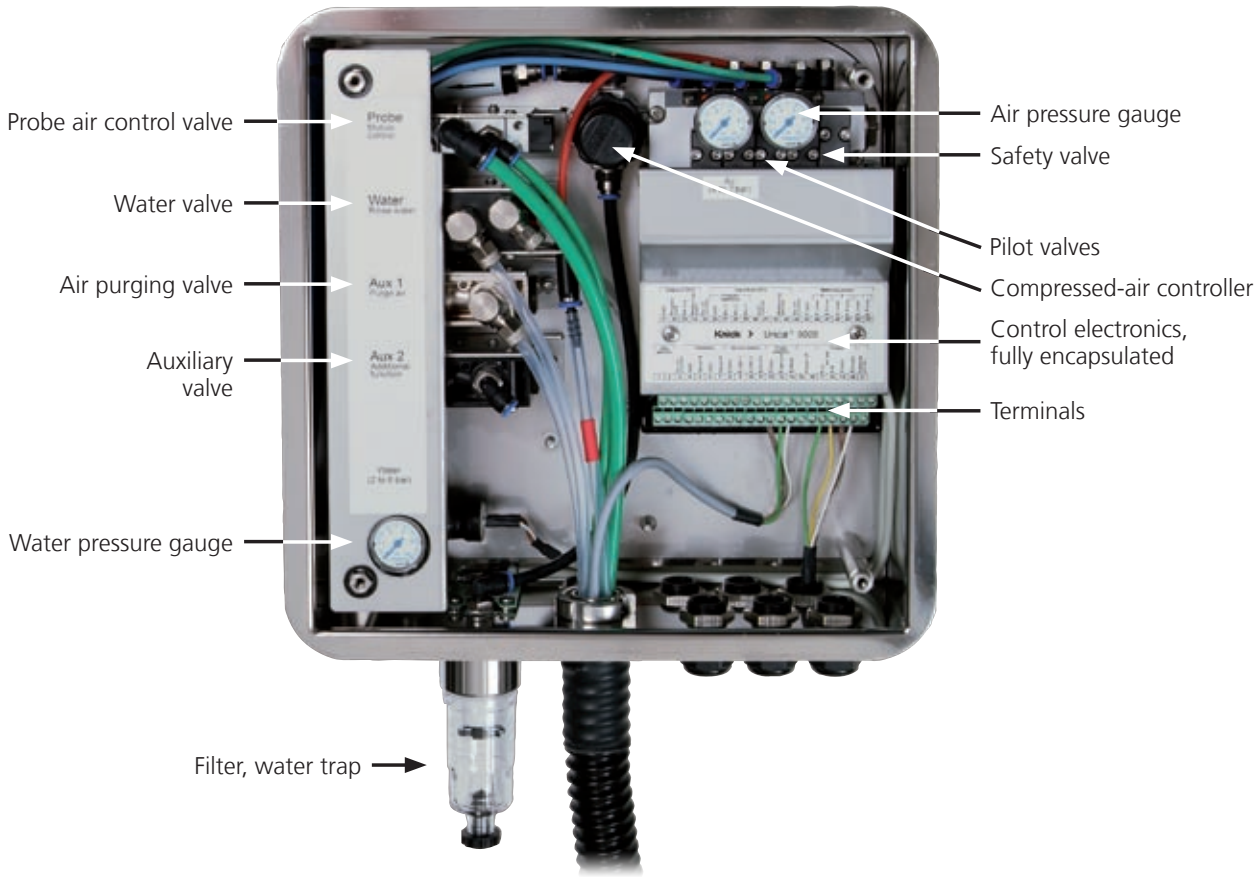

The valve units are expandable.

Unical® 9000

New, Innovative Pump Design for Low Maintenance Costs

– no usual pistons/cylinders
– no moving mechanical parts
– no wear
– no stored energy
  as defined in ATEX 94/9/EC
– all process-wetted parts are
  chemically resistant

Modular Flexibility for Very Simple Adaptation

– The buffer or cleaning solution bottles (3.5 l) are replaceable active, self-sustaining units with integrated pump:
  easy refilling of buffer or cleaning solution, without removing the pump
– The pump units are automatically recognized by the system.
– The closure consists of a conveyor cap with funnel and buttoned lid.
– This innovative construction provides previously unknown flexibility and service friendliness.

Overview – The Complete System

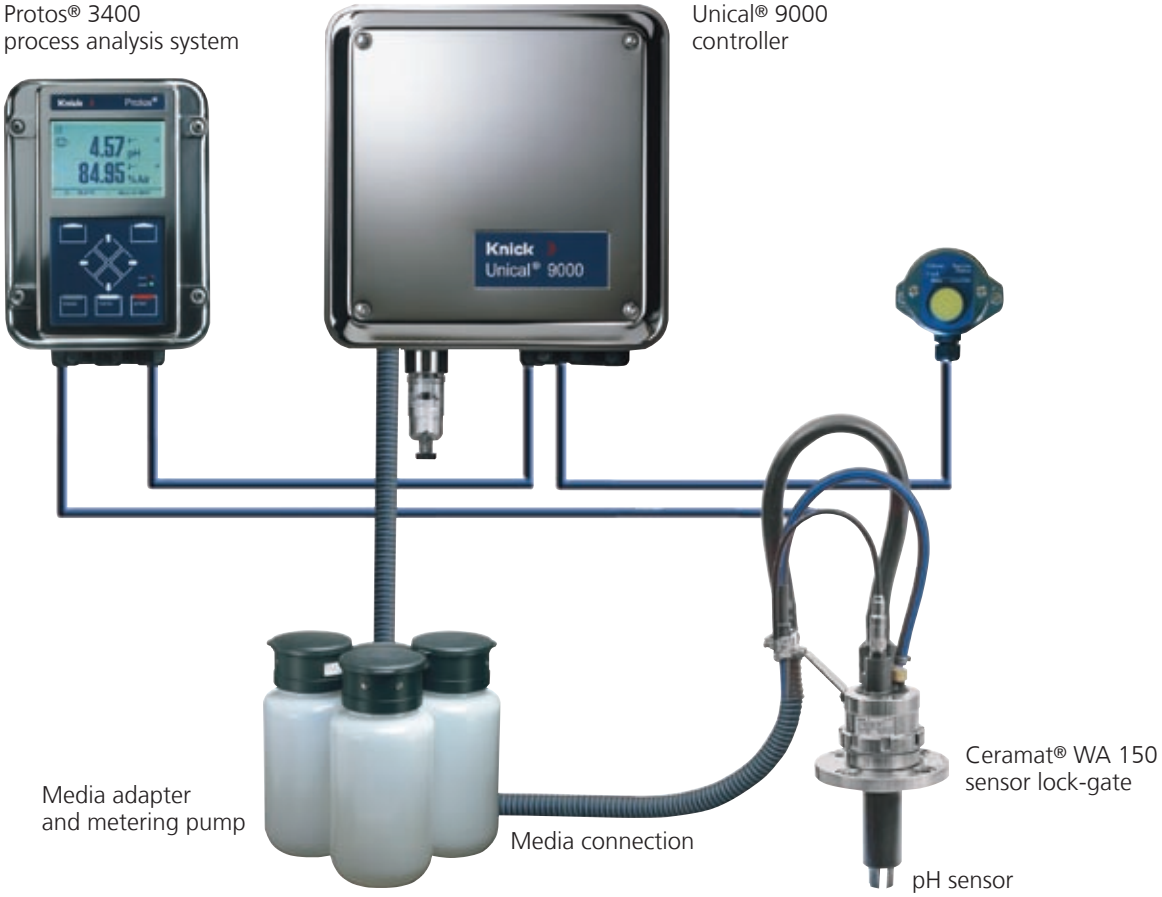

Safe Pump System with Minimum Buffer Consumption and Minimum Entrainment

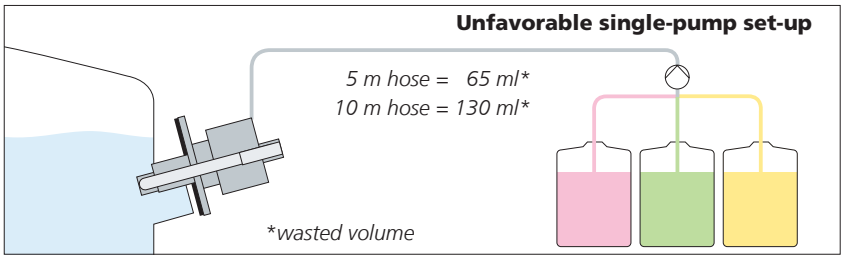

Entrainment
through 5–10 m hose

Waste of complete
hose volume

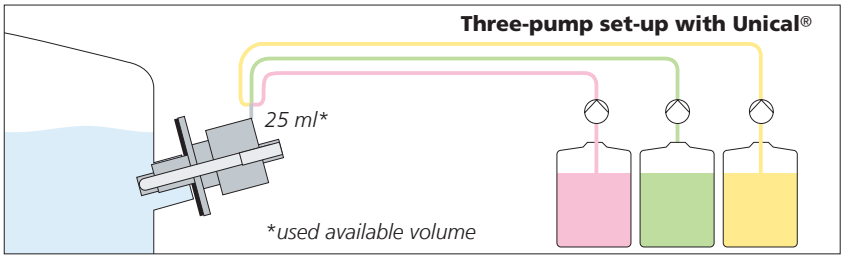

Separate hoses – no entrainment
= max. accuracy!

Minimum buffer consumption
(only 25 ml / cycle)

Unical® 9000

Specifications

Compressed air	oil- and condensate-free
Permitted pressure range	4 … 10 bars
Pressure monitoring	automatic monitoring, message
Connection	1/4" internal thread
Rinse water	filtered 100 µm
Permitted pressure range	2 … 6 bars
Temperature range	5 … 6 °C
Pressure monitoring	automatic monitoring, message
Connection	1/4" internal thread and 3/4" external thread (for coupling)
Pump (option)	for buffer solution/cleaning solution
Number of bottles	max. 3
Usable bottle volume	3.5 l
Max. lifting height	10 m
Displaced volume	25 ml/stroke
Level monitoring	continuous, messages
Material	PP, PE, EPDM, (optional FKM), check valves: glass, HC4
Dimensions	150 mm x 150 mm x 340 mm with 3.5-L bottle
Weight	approx. 1.5 kg (with empty 3.5-L bottle)
Supply	supplied via Protos® PHU module
(Ex ia IIC)	Vi = 8.5 V Ii = 200 mA Pi = 400 mW 6.8 V (± 10 %) / 15 mA
Connection	terminals, conductor cross section max 2.5 mm² (preassembled connecting cable to Protos® 3400)
RS 485	communication with Protos® PHU module or external host computer (e.g. DCS/PLC)
(Ex ia)	Vi/Vo = 5 V Ii/Io = 250 mA Ri = 20 ohms
Transmission	1200 bauds/8 data bits/1 stop bit/no parity
Security	CRC16
Connection	terminals, conductor cross section max 2.5 mm² (preassembled connecting cable to Protos® 3400) max. length 10 m
Media connection	compact multiplug connection for 3 x buffer, 1 x rinse water, 1 x cleaning solution, 1 x purge air, 5 integrated check valves for buffer solution, water and cleaning solution, 2 x compressed air connection for drive, noncontacting electrical limit position control
Media adapter	approx. 2 kg
Service switch	wall or pipe mounting (Ø 30 … 65 mm), cable length –> Unical® 9000: 5 m (opt. 10m)
DCS Input M/S	Measuring/Service
(Ex ia IIC)	Vi = 30 V, floating, galvanic isolation up to 60 V

Specifications – *continued*

Switching voltage	0 … 2 V AC/DC 10 … 30 V AC/DC	inactive (measuring) active (service)
Connection	terminals, conductor cross section max. 2.5 mm²	
DCS input A/M	automatic mechanism blocked	
(Ex ia IIC)	Vi = 30 V, floating, galvanic isolation up to 60 V	
Switching voltage	0 … 2 V AC/DC 10 … 30 V AC/DC	inactive (automatic intervals enabled) active (automatic intervals blocked)
Connection	terminals, conductor cross section max. 2.5 mm²	
DCS inputs PRG1 … 3	program selection 1 … 8	
(Ex ia IIC)	Vi = 30 V, floating, inter-connected, galvanic isolation up to 60 V	
Switching voltage	0 … 2 V AC/DC 10 … 30 V AC/DC	inactive active
Connection	terminals, conductor cross section max. 2.5 mm²	
DCS outputs ML1 … 3	check-back signals: Service, measuring, program electronic relay contacts, floating, inter-connected	
(Ex ia IIC)	Vi = 30 V Ii = 100 mA Pi = 800 mW, galvanic isolation up to 60 V	
Voltage drop	< 1.2 V	
Connection	terminals, conductor cross section max. 2.5 mm²	
Explosion protection	II 2(1)G Ex ia IIC T4	
EMC	EN 61326 EN 61326/A1	
Lightning protection	EN 61000-4-5, Installation Class 2	
Protection against electric shock	according to EN 61010	
Ambient conditions	5 … 55 °C (Ex: 5 … 50 °C)	
Ambient temperature	(different temperature range on request)	
Transport/Storage temperature	–20 … +70 °C	
Relative humidity	10 … 95 %, not condensing	
Enclosure	Unical® 9000 S Unical® 9000 C	Stainless steel A2, polished Stainless steel A2, coated, color: pigeon blue
Assembly	wall and pipe mounting (see dimension drawing)	
Dimensions	W x H x D approx. 320 mm x 400 mm x 120 mm	
Ingress protection	IP 65/NEMA 4X	
Cable glands	6 cable glands M20 x 1.5 knockouts for NPT 1/2" or Rigid Metallic Conduit	
Weight	approx. 9 kg	

Unical® 9000

Product Line — Order No.

Basic unit		**Unical® 9000 /**	□	□	□	□	□	□	□	□	□	□	–	□	□	□
	Explosion protection	for hazardous area Zone 1	**X**													
		none	**N**													
	Enclosure	steel, coated		**C**												
		stainless steel, polished		**S**												
	Media connection (rinse function only)	5 m (sealing material: FKM)			**1**		**0**	**0**	**0**	**0**						
		10 m (sealing material: FKM)			**2**		**0**	**0**	**0**	**0**						
		15 m (sealing material: FKM)			**5**		**0**	**0**	**0**	**0**						
		5 m (sealing material: EPDM)			**A**		**0**	**0**	**0**	**0**						
		10 m (sealing material: EPDM)			**B**		**0**	**0**	**0**	**0**						
		15 m (sealing material: EPDM)			**E**		**0**	**0**	**0**	**0**						
	Media connection (calibration and rinse function)	5 m (sealing material: FKM)			**3**											
		10 m (sealing material: FKM)			**4**											
		17 m (sealing material: FKM)			**6**											
		5 m (sealing material: EPDM)			**C**											
		10 m (sealing material: EPDM)			**D**											
		17 m (sealing material: EPDM)			**F**											
	Media interface	with (for standard probes)				**1**										
		without (for WA 130, WA 150, WA 160)				**0**										
	Media adapter with port I – III	with (sealing material: FKM)					**1**									
		with (sealing material: EPDM)					**A**									
		without					**0**									
	Port I	metering pump with empty 3.5-L bottle (EPDM)						**2**								
		none						**0**								
	Port II	metering pump with empty 3.5 -L bottle (EPDM)							**2**							
		none							**0**							
	Port III	metering pump with empty 3.5-L bottle (EPDM)								**2**						
		metering pump with empty 3.5-L bottle (FKM)								**B**						
		none								**0**						
	Supplementary air purging kit	with									**C**					
		without									**N**					
	Supplementary ext. valve kit	1 external valve										**E**				
		none										**N**				
	Special variant	none												**0**	**0**	**0**

Accessories for Unical® 9000

	Order No.
Pipe-mount kit for Unical® 9000	**ZU 0601**
Pipe-mount kit for media adapter	**ZU 0606**
Connection kit for Unical® 9000 (water and air)	**ZU 0656**
Start-up Unical® 9000 **Start-up comprises the following steps:** – Connection of hoses and cables and commissioning of the Unical® 9000 system. – Induction of operators **Prior to arrival of our engineer, the customer must prepare the following:** – Protos® 3400, Unical® 9000 and retractable fitting assembled (Observe maximum length of connecting hose between Unical® 9000 and retractable fitting). – Electric supply: Cable ducts/rails must be present. Auxiliary power supply for Protos® 3400 must be installed in 2 x 1.5 mm. – Air supply: Hose with connection nipple G 3/4" internal thread. Nominal hose width > 6 mm. Water supply: Hose with connection nipple G 3/4" internal thread or G 3/4" external thread. Nominal hose width > 6 mm.	**ZU 0649**
Chemical pump (supplementary ext. valve kit required)	**ZU 0741**

Spare Parts and Retrofit Parts for Unical® 9000

	Order No.
Media connection, rinse, 5 m (FKM gaskets) Media connection, rinse, 5 m (EPDM gaskets)	**ZU 0572/1** **ZU 0572/2**
Media connection, rinse, 10 m (FKM gaskets) Media connection, rinse, 10 m (EPDM gaskets)	**ZU 0573/1** **ZU 0573/2**
Media connection, rinse, 15 m (FKM gaskets) Media connection, rinse, 15 m (EPDM gaskets)	**ZU 0652/1** **ZU 0652/2**
Media connection, rinse + cal, 5 m (FKM gaskets) Media connection, rinse + cal, 5 m (FKM gaskets), steel balls instead of glass balls*) Media connection, rinse + cal, 5 m (EPDM gaskets)	**ZU 0574/1** **ZU 0574/1S** **ZU 0574/2**
Media connection, rinse + cal, 10 m (FKM gaskets) Media connection, rinse + cal, 10 m (EPDM gaskets)	**ZU 0575/1** **ZU 0575/2**
Media connection, rinse + cal, 17 m (FKM gaskets) Media connection, rinse + cal, 17 m (EPDM gaskets)	**ZU 0653/1** **ZU 0653/2**
Media interface for standard probes	**ZU 0576**
Metering pump (PP, FKM) with empty 3.5-L bottle Metering pump (PP, EPDM) with empty 3.5-L bottle Metering pump (PP, EPDM) with empty 3.5-L bottle, steel balls instead of glass balls*)	**ZU 0580/1** **ZU 0580/2** **ZU 0580/2S**
Metering pump (PP, FKM) with empty 3.5-L bottle, Ex Metering pump (PP, EPDM) with empty 3.5-L bottle, Ex	**ZU 0580 X/1** **ZU 0580 X/2**

*) included with special version -001

Unical® 9000

Spare Parts and Retrofit Parts for Uniclean® 9000 – *continued*	Order No.
Supplementary air purging kit	**ZU 0587**
Supplementary Aux 2 kit	**ZU 0588**
Media adapter (FKM gaskets)	**ZU 0577/1**
Media adapter (EPDM gaskets)	**ZU 0577/2**
Media adapter, Ex (FKM gaskets)	**ZU 0577 X/1**
Media adapter, Ex (EPDM gaskets)	**ZU 0577 X/2**
Service switch, coated steel	**ZU 0729 NC**
Service switch, coated steel, Ex	**ZU 0729 XC**
Service switch, polished stainless steel	**ZU 0729 NS**
Service switch, polished stainless steel, Ex	**ZU 0729 XS**

Service Parts for Unical® 9000	Order No.
Air pressure switch	**ZU 0632**
Water pressure switch	**ZU 0633**
Probe valve, complete	**ZU 0634**
Water valve	**ZU 0714**
Sensor dismount guard, complete	**ZU 0644**
Air purge valve, complete	**ZU 0636**
Aux 2 valve, complete	**ZU 0637**
Piezo valve for valve block	**ZU 0638**
Gasket for port at media adapter (EPDM)	**ZU 0639**
Filter insert (5 … 10 µm)	**ZU 0640**
Replacement filter housing	**ZU 0641**
Electronics module, tested, encapsulated	**ZU 0642**
Electronics module, tested, encapsulated, Ex	**ZU 0642 X**
Small-parts set (various screws, springs etc.)	**ZU 0643**
Multiplug service set, FKM gaskets	**ZU 0812/1**
Multiplug service set, EPDM gaskets	**ZU 0812/2**
Reed switch, short (service part for multiplug)	**ZU 0813/1**

Dimension Drawings

Wall mounting

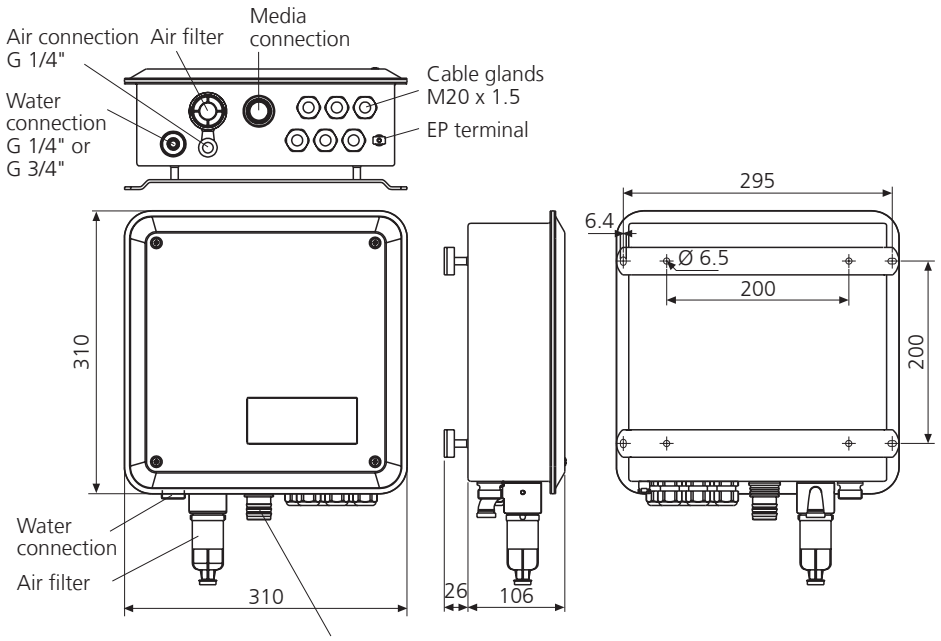

Pipe mounting

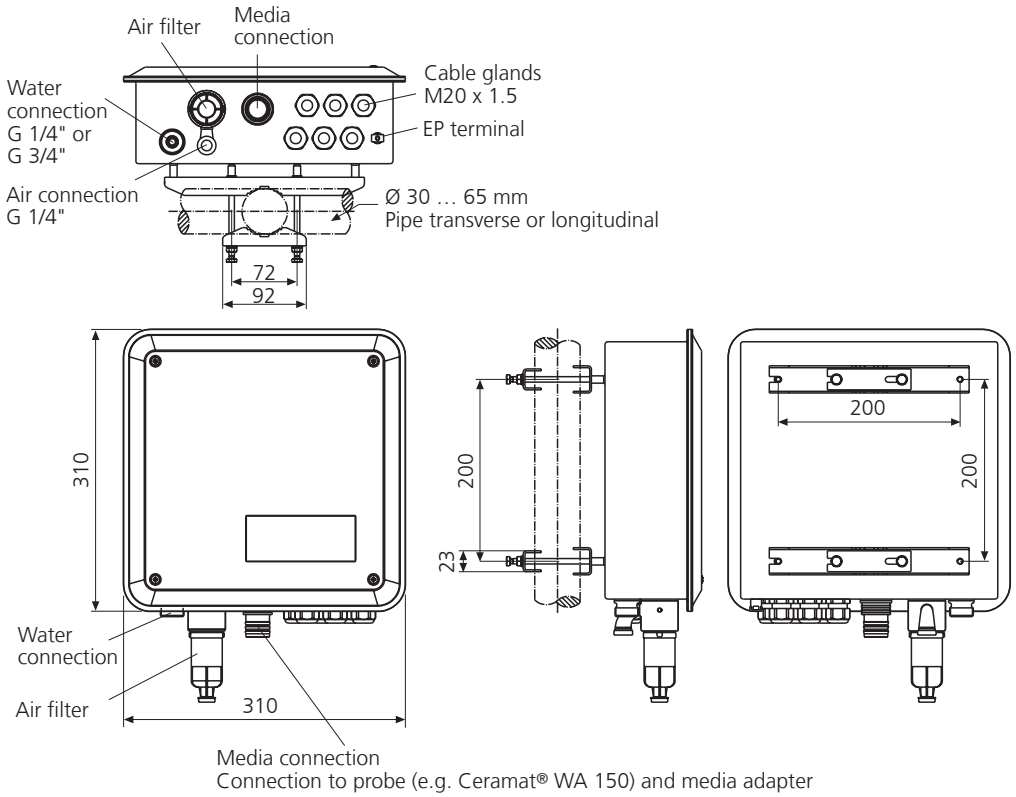

Unical® 9000

Dimension Drawings – *continued*

Pipe mounting

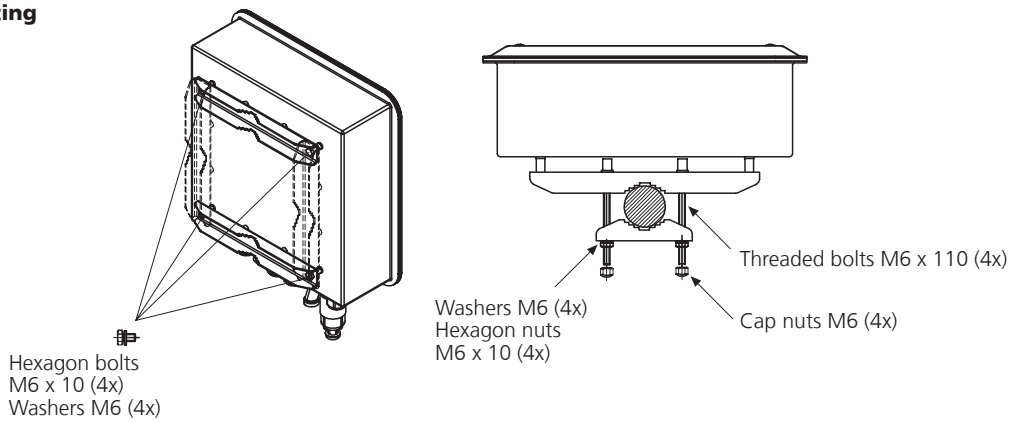

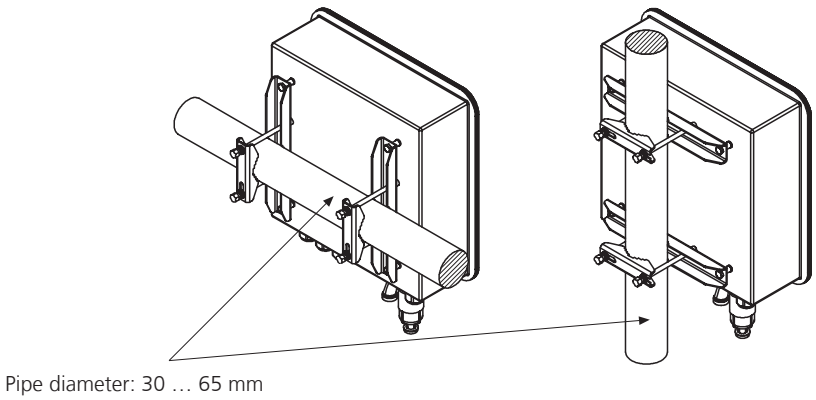

Media adapter

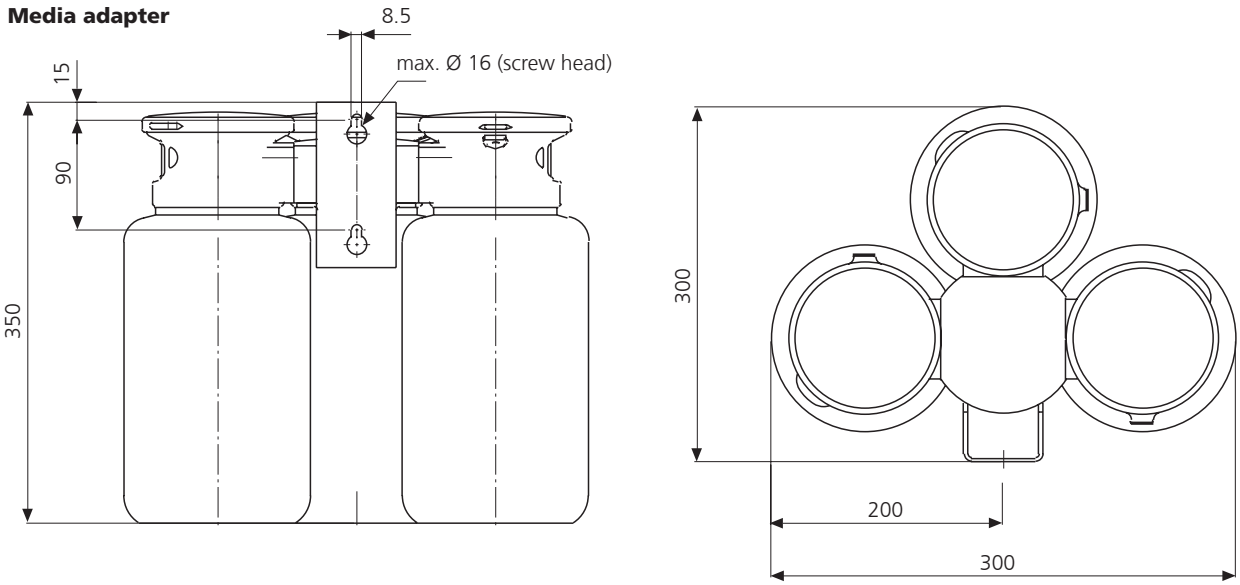
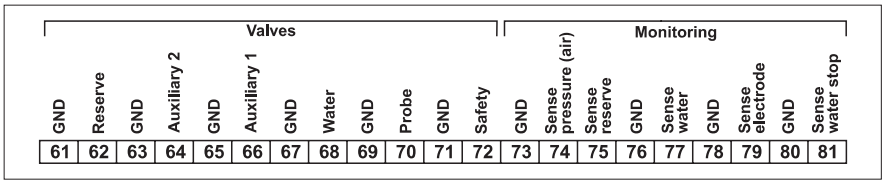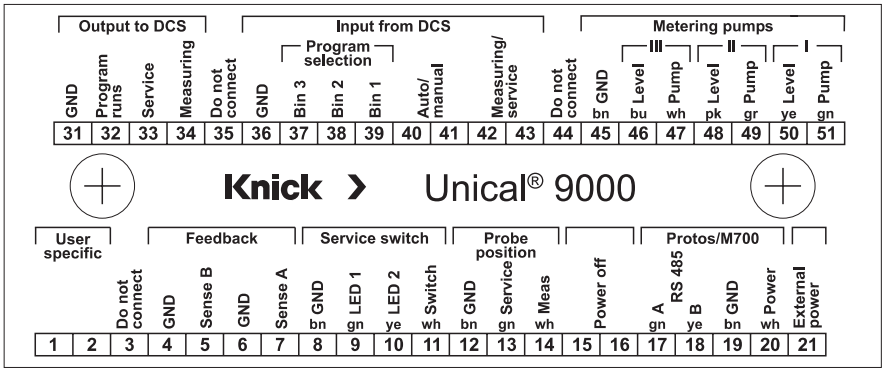
Terminal Assignments