SE 604 Conductivity Sensor

Robust 2-electrode sensor for precise and reliable measurement of low and very low conductivities, particularly in ultrapure water

Robust, coaxially arranged electrodes made of stainless steel. Large measuring range from ultrapure water to 1000 µS/cm with only one sensor model (cell constant). Integrated temperature detector for exact temperature compensation. Easy to clean thanks to replaceable outer electrode. Reliable and easy checking of the point of measurement using PortaSim® simulators.

Applications

Boiler feed water, feed water, boiler water, cooling water, water vapor cycle, pure water, condenser monitoring

Facts

- large measuring range from 1 nS/cm to 1000 µS/cm
- coaxially arranged electrodes
- independent of installation conditions
- integrated temperature detector
- high level of process safety due to durable materials and robust design
- easy to clean thanks to detachable outer electrode
- particularly suitable for monitoring ultrapure water in power plants
- Calibration Certificate
- suitable PortaSim® simulators

Product Line

		Order No.
SE 604 Conductivity Sensor	G 1"	**SE 604**

Specifications

Cell constant:	0.029/cm
Range:	0.001 … 1000 µS/cm
Material:	cell and electrodes: 1.4571 stainless steel, insulator: PVDF, gaskets: FKM (Viton)
Temperature detector:	Pt 1000 Class A, T_{90} < 2 min
Temperature:	process: –30 … +120 °C environment: –25 … +80 °C
Pressure:	max. 25 bars (–30 … +70 °C) max. 10 bars (120 °C)
Process adaptation:	G 1" thread
Sensor cap:	7-pole

Pressure/Temperature Diagram

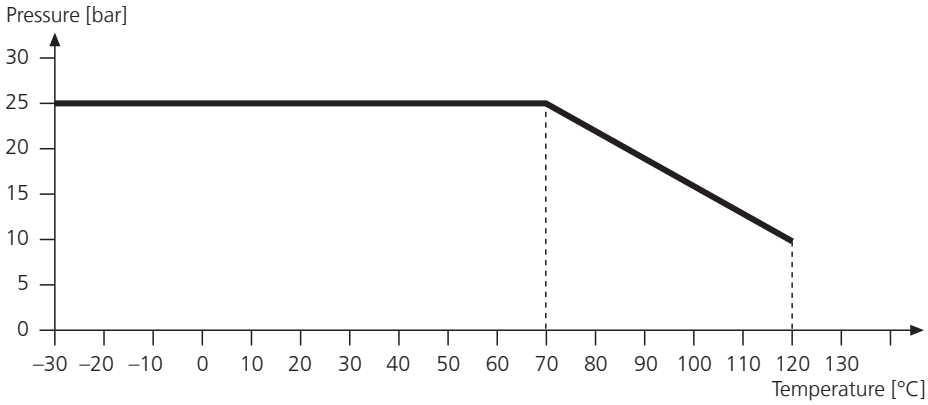

Typical Configurations

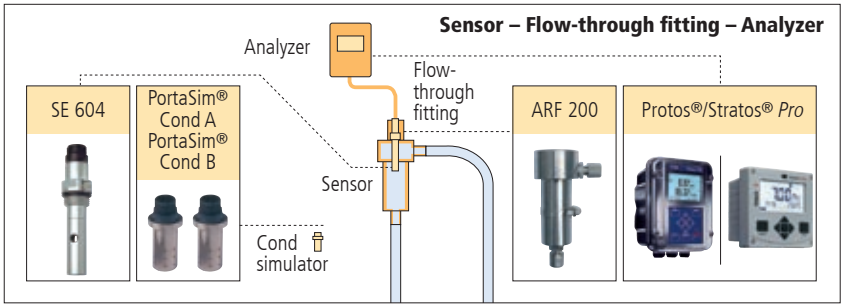

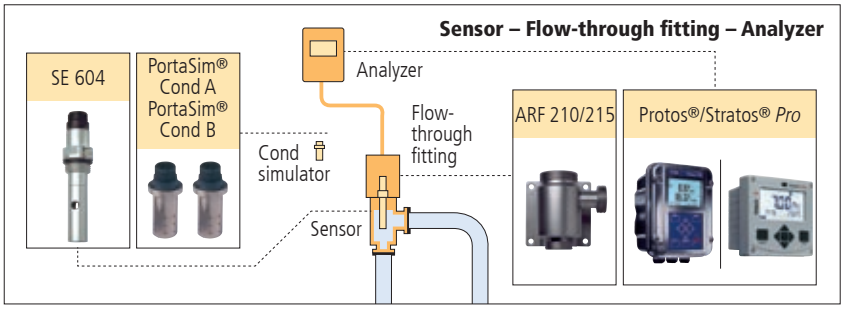

ARF 200
Flow-through fitting made of stainless steel

ARF 210/215
Flow-through fittings made of plastic and stainless steel

Stratos® *Pro*
Standard analyzer for pH, conductivity, and oxygen

Protos®
Modular measuring system for pH, conductivity, and oxygen

PortaSim® Cond A/Cond B
Conductivity simulator, on-site testing device

Dimension Drawing

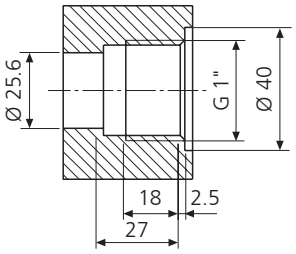

Installation conditions

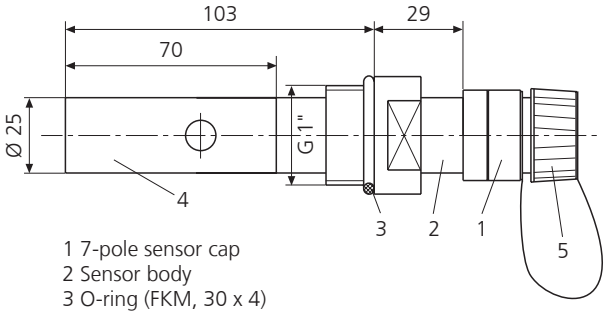

1 7-pole sensor cap
2 Sensor body
3 O-ring (FKM, 30 x 4)
4 Detachable outer electrode
5 Protective cap

SE 604 Conductivity Sensor

Accessories	(Details from pages 85 and 134)				Order No.
Measuring cable with plug	Sensor connection:	7-pole socket		1.5 m	**ZU 0743**
	Device connection:	wire end ferrules		3 m	**ZU 0645**
	Temperature:	–20 … +80 °C		5 m	**ZU 0569**
				10 m	**ZU 0570**
				15 m	**ZU 0589**
				20 m	**ZU 0590**
				30 m	**ZU 0660**
Conductivity standard	KCl	300 ml	15 µS/cm	±1 %	**ZU 0350**
	KCl	500 ml	147 µS/cm	±1 %	**ZU 0702**
Calibration Certificate					**ZU 0320**
6-hole flange					**ZU 0278**
Conductivity simulator (cell const. 0.029/cm (Details from page 86)	PortaSim® Cond A*) 0.055 µS/cm, 25 °C				**ZU 0308**
	PortaSim® Cond B*) 5 µS/cm, 100 °C				**ZU 0309**

*) Conductivity simulator; checking the meter and cable by simulating the sensor.
High-precision comparison resistors, traced to NIST standard. Used for measurement to USP <645>.
Check by simply replacing the sensor by the simulator

Accessories/Specifications

Flange (6-hole)
ZU 0278

Material:	1.4571 stainless steel
Accessories:	6 screws, washers, nuts, M 12, 1.4571 stainless steel
Pressure:	10 bars
Temperature:	120 °C
Sensor locations:	1 x G 1"
Sensors:	SE 604

Dimension drawing: SE 604 with ZU 0278 flange

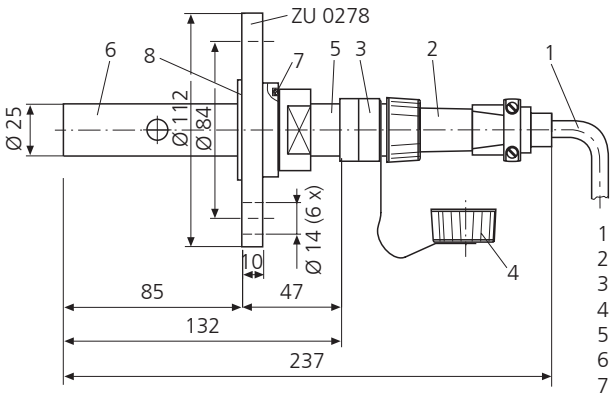

1 Connecting cable
2 Connecting plug IP 67
3 Screw cap
4 Cap
5 Sensor body
6 Detachable outer electrode
7 O-ring (FKM, 30 x 4)
8 Flat gasket

Cable for SE 604
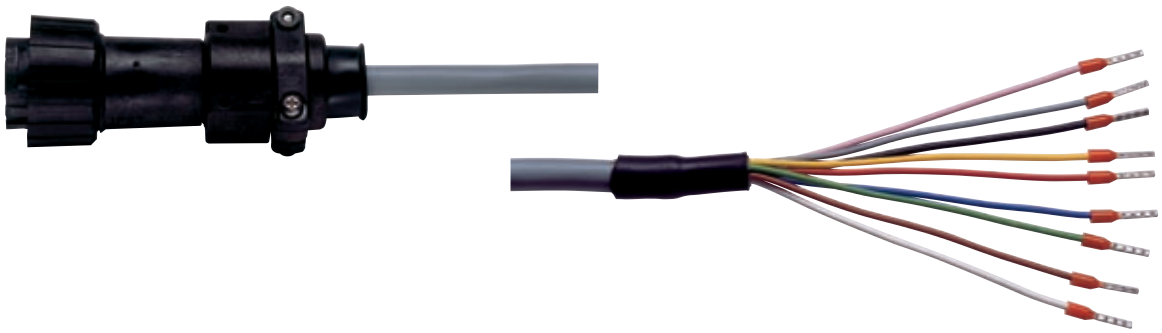
Length: 1.5 m, 3 m, 5 m, 10 m, 15 m, 20 m, or 30 m